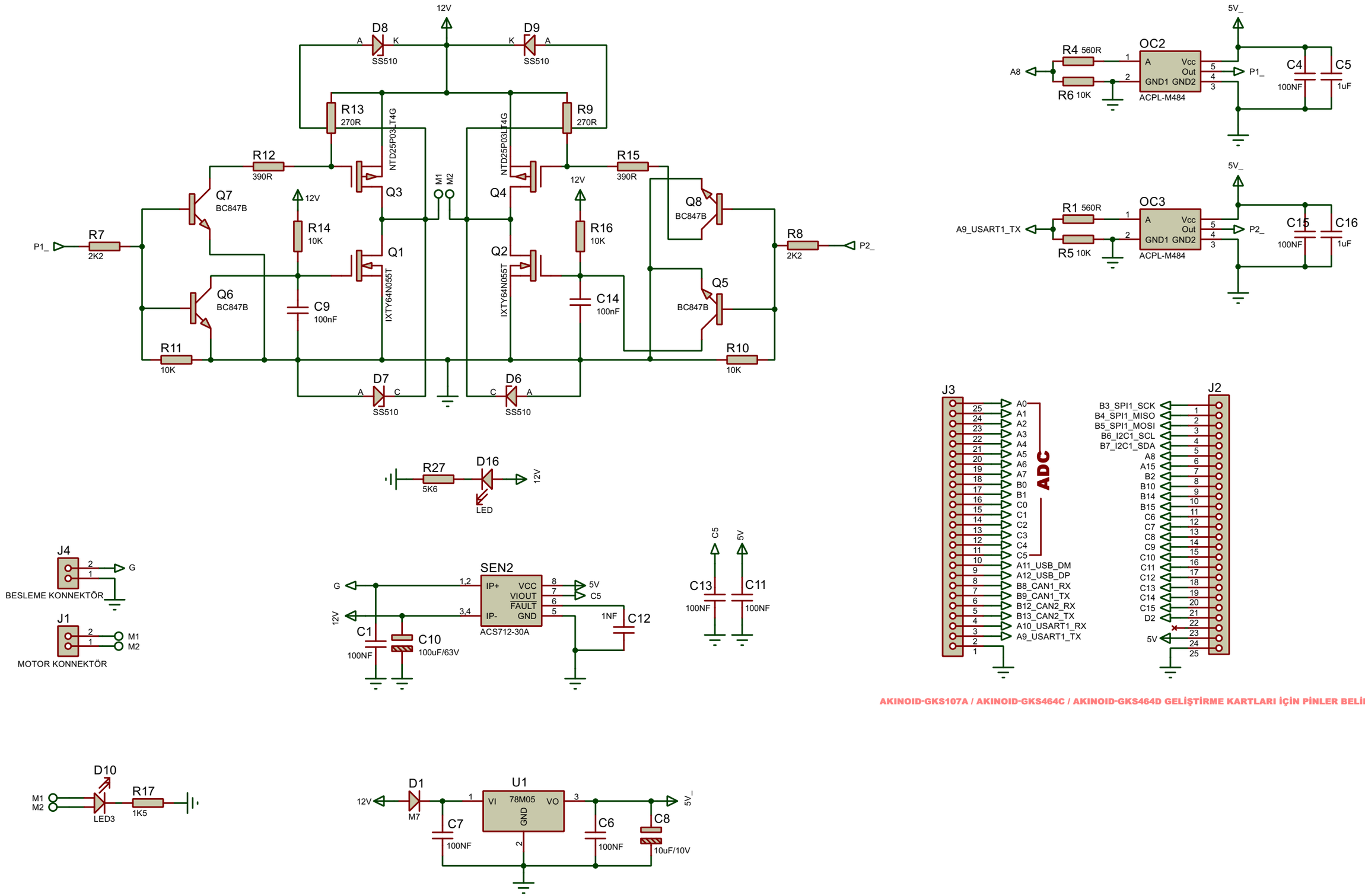

AKINOID-GKS107A / AKINOID-GKS464C / AKINOID-GKS464D GELİŞTİRME KARTLARI İÇİN PİNLER BELİRTİLMİŞTİR

FILE NAME	: DCDRV5A.pdsprj
DESIGN TITLE	: DC Motor Sürücü
BY	: AKINROBOTICS
VERSION	: V.1
DATE	: 2.12.2021